IF IN DOUBT - ASK

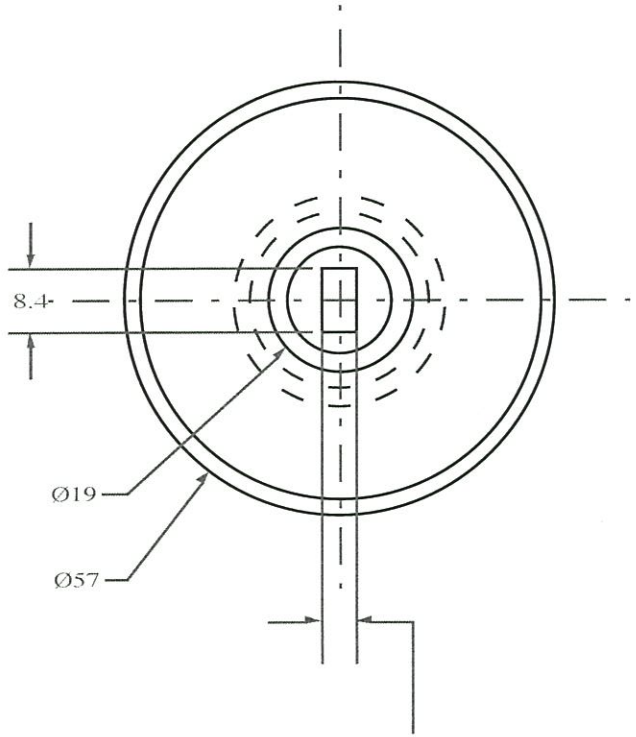

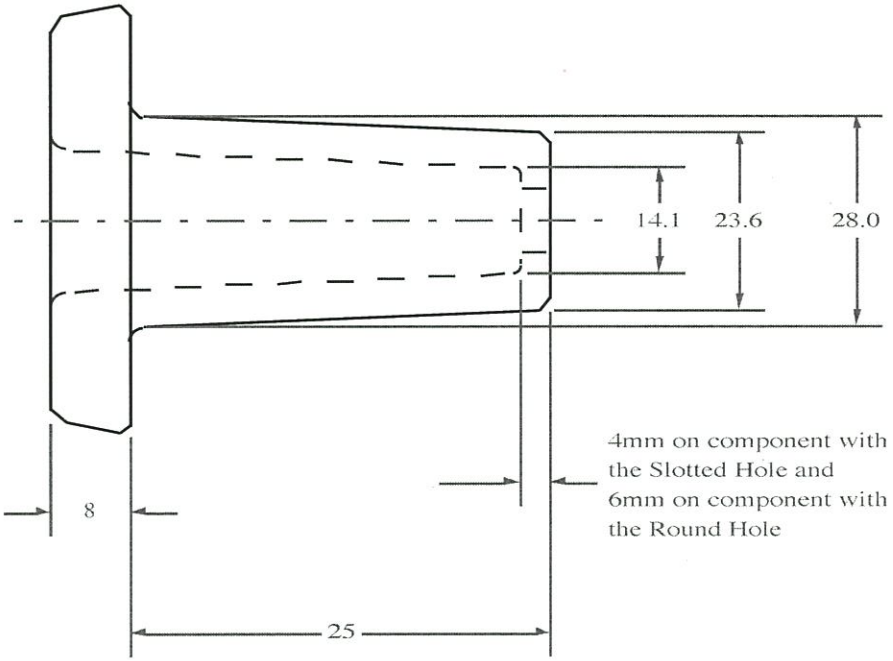

Overall Tolerance is 4.9 +/- 0.3
When manufacturing please aim for the dimension to be 4.7 to 5.1mm

ALL DIMENSIONS SHOWN IN mm

NOTES
Slotted Hole
Part No. 47803

Round Hole
Part No.47803R

Round Hole Ø7mm

DESCRIPTION
Cup Lock Anchor

MATERIAL
Anchor Refractory

DRAWING NUMBER
47802

DATE DRAWING ISSUED
15/05/05

ISSUE
1

SCALE
NTS

SHEET
1of1

A4

THIRD ANGLE PROJECTION